SMART **HEATING** TECHNOLOGY

Purity to Nature
Savings to Clients
Comfort to Users

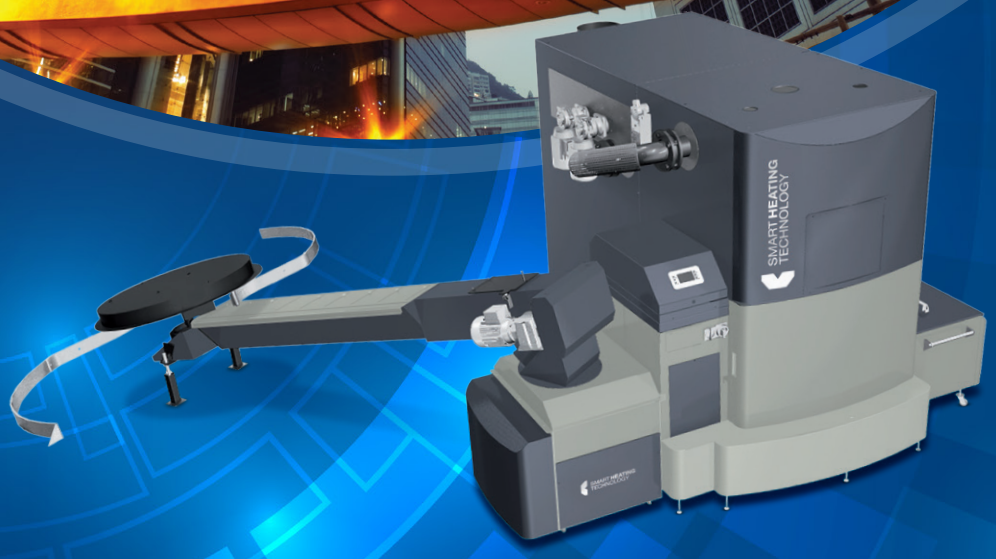

AUTOMATIC BIOMASS BOILER

SMART 400 kW

▪ Fully automatic, ecologic boiler with excellent features ▪ Technical solution flexibility ▪ Multiple fuel possibility ▪ Economical and ecological operation ▪ Efficiency 96 % ▪ Output modulation 30–100 % ▪ Lambda sensor ▪ Ceramic Burner Option ▪ Vibrating Burner Plate Option ▪ Low Maintenance & Service requirements ▪ Heating circuits regulation ▪ Cascade installation solutions ▪ Mobile phone control ▪ Internet control ▪ Mobile container solutions ▪ Special boiler accessories

AUTOMATIC BIOMASS BOILER

SMART 400 kW

SMART HEATING TECHNOLOGY

ČSN-EN 303.5/2013

ISO 9001:2009

DIMENSIONS AND WEIGHTS OF TECHNOLOGY 400 kW

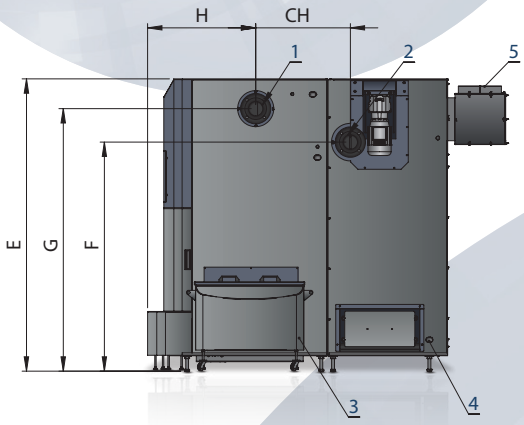

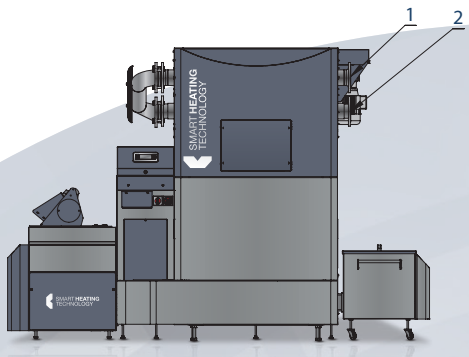

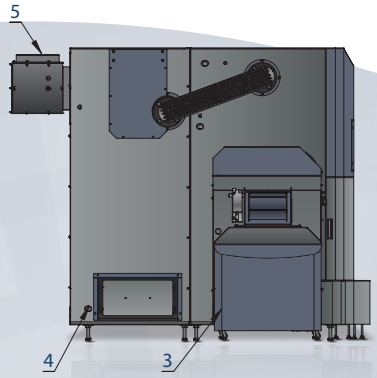

1. Water outlet DN100/PN6
2. Water inlet DN100/PN6
3. In/out water valve 3/4" of burning chamber
4. In/out water valve 3/4" of heat exchanger
5. Chimney outlet avg. 300 mm

* Option for limited spaces

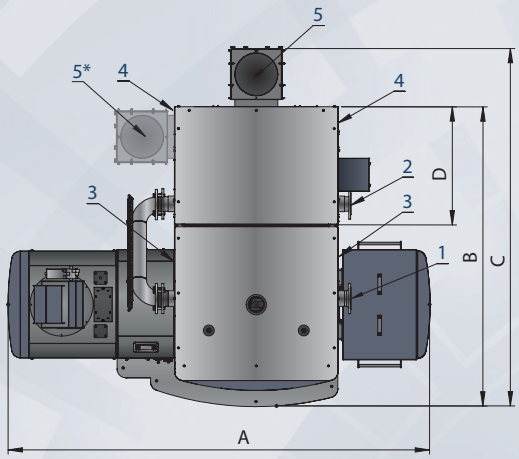

Left sided

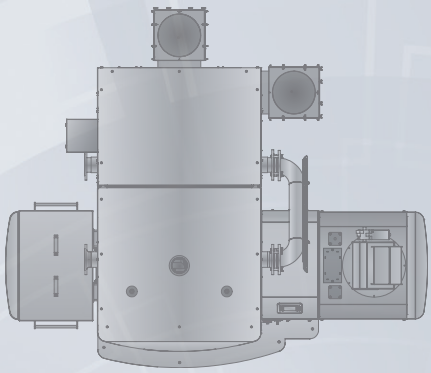

Right sided

A	B	C	D	E	F	G	H	CH
2940	2320	2720	1060	1995	1560	1790	750	655

WEIGHTS		
Burning chamber 400 kW	1 550 kg	Total weight
Exchanger 400	1 700 kg	3 250 kg

SERVICE ZONES OF TECHNOLOGY 400 kW

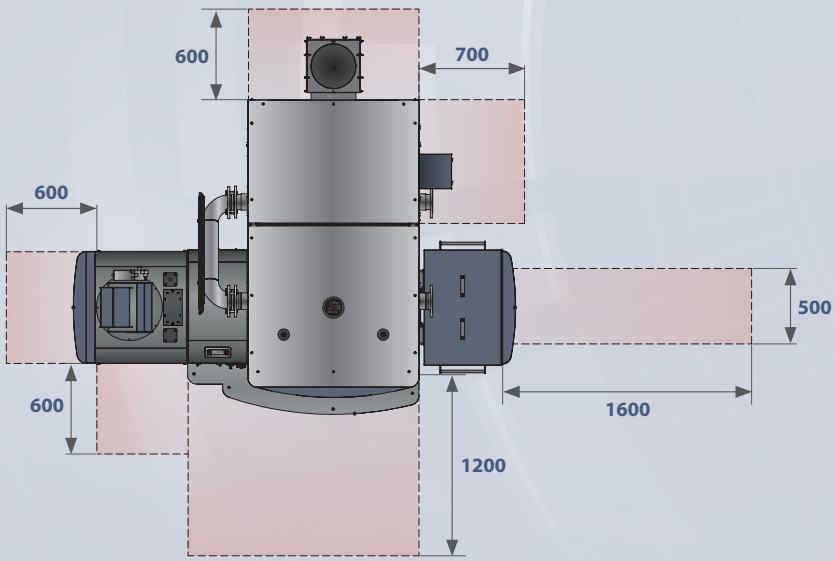

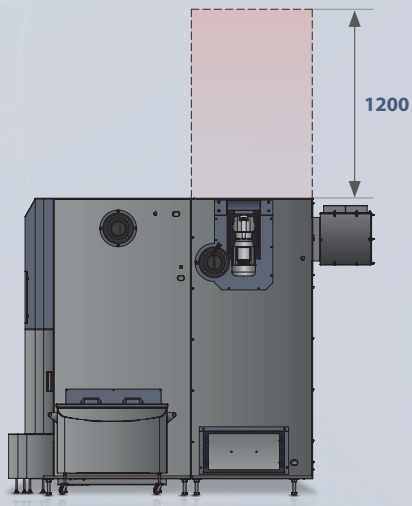

AUTOMATIC BIOMASS BOILER

SMART 400 kW

SMART HEATING TECHNOLOGY

ČSN-EN 303.5/2013

ISO 9001:2009

TECHNICAL SPECIFICATIONS 400 kW

AUTOMATIC BIOMASS BOILER SMART 400 kW		Wood pellets		Wood chips	
		Rated	Minimum	Rated	Minimum
Measured values					
Rated heat capacity	kW	400	400	400	400
Combustion product temperature	°C	95,1	62,0	98,9	62,7
Fuel consumption	kg/hour	90,70	20,60	98,30	22,90
Input water temperature	°C	60,2	61,1	59,7	57,9
Outlet water temperature	°C	77,8	76,5	75,4	74,1
Cooling water temperature	°C	9,4	10,4	9,6	11,0
Cooling water flow rate	m^3/hod	19,311	5,110	22,025	5,135
Draught behind boiler	Pa	173,0	25,0	170,0	26,0
Ambient temperature	°C	27,0	24,0	28,0	24,0
Relative air humidity	%	32,0	33,0	35,0	35,0
Barometric pressure	kPa	99,10	99,30	99,05	99,15
Flue gas analysis					
Oxygen O_2	%	8,06	9,43	7,24	10,73
Carbon dioxide CO_2	%	11,26	10,10	11,95	9,31
Carbon monoxide CO	ppm	105	111	139	167
Higher hydrocarbons OGC	ppm	9	3	2	6
Nitrogen dioxides Nox	ppm	68	67	100	65
Dust	mg/m^3	25	29	66	67
O2 = 10 %					
Carbon monoxide CO	mg/m^3	116	144	140	227
Higher hydrocarbons OGC	mg/m^3	5	2	1	3
Nitrogen dioxides Nox	mg/m^3	118	130	164	139
Dust	mg/m^3	20	29	30	48
Auxiliary combustion values (solid fuels)					
Mass flow rate gases	kg/sec	0,276	0,068	0,257	0,074
Stoichiometric oxygen value	m^3/kg	0,958	0,957	0,832	0,830
Stoichiometric air value	m^3/kg	4,560	4,559	3,961	3,951
Stoichiometric volume of dry combustion products	m^3/kg	4,449	4,447	3,882	3,872
Stoichiometric air multiple		1,62	1,85	1,52	2,08
Volume of dry combustion products, actual	m^3/kg	7,521	8,442	6,294	8,106
Volume of H_2O in the combustion air	m^3/kg	0,082	0,085	0,080	0,134
Volume of H_2O in the combustion produts	m^3/kg	0,937	0,940	0,926	0,935
Maximum volume CO_2	%	19,01	19,01	19,37	19,36
Calculated values - heat overview					
Loss of sensible heat of combustion products (chimney)	%	4,8	3,0	4,7	3,2
Loss of gas underburning	%	0,1	0,1	0,1	0,1
Loss of mechanical underburning	%	0,0	0,1	0,4	0,6
Loss of heat transfer into the environment	%	0,5	1,1	0,5	0,9
Total loss	%	5,3	4,2	5,4	4,6
Efficiency – indirect method	%	94,8	95,9	94,7	95,4
Heat input	kW	417,2	94,9	420,1	98,1
Heat capacity	kW	398,0	91,0	401,8	94,0
Uncertainty of determining heat capacity	%+/-	16,7	3,8	16,9	4,0
Efficiency – direct method	**%**	**95,4**	**95,9**	**95,6**	**95,8**
Capacity / rated output	%	99,5	22,8	100,9	23,9

*Boilers can be operated at 90 °C only when special conditions are met

CERTIFIED OPERATING VALUES 400 kW

SMART BOILER OPERATING DATA		
Technical data of the boiler		
Marking		400
Nominal power Pn	kW	400
Partial load (power) Pp	kW	100
Boiler efficiency at Pn	%	>95
Boiler class		5
Water		
Water volume	l	790
Diameter of water connection	"	4
Diameter of water connection	DN	100
Hydraulic-pressure drop of the boiler at the temperature fall 20°	mbar	110
Boiler temperature	°C	60-90*
Minimal temperature of returnable water	°C	55
Maximal operational pressure	bar	3,5
Test pressure	bar	6,5
Temperature of furnace	**°C**	**900-1100**
Pressure of furmace	mbar	-0,04
Required draught of the chimney	mbar	0,2
Requirement for the forced draught		Yes
Combustion temperature at Pn	°C	98,9
Combustion temperature at Pp	°C	62,7
Diameter of flue gas duct	mm	300
Diameter of chimney	mm	350
Fuel clasification according to norm EN 14961		
Wood pellets - C1	Tested fuel	D6, M10, A1,5, DU90,0
Wood chips - B1		P45, M30, A3.0
Electrical installation		
Electrical connection		3+N+PE 50Hz 230/400V TN-C-S
Conveyor engine	W	550
Feeding auger engine	W	550
Exchanger cleaning engine (s)	W	2 x 550
Ash-removing engine	W	550
Fan of primary air	W	66
Fan of secondary air 1	W	170
Fan of secondary air 2	W	170
Chimney exhaust fan	W	1100
Electrical ignition	W	1600
Separation flap valve	W	6,5
Total	**W**	**4762,5**

▪ Measured ▪ Interpolace is in complience with EN303.5 coll. 5.3.1